PROJECT	QUANTITY	ITEM NO

*Smart**Combi***™ combi oven

MODEL **ESC-115** electric
GSC-115 gas

SmartCombi ESC/GSC-115 with capacity of 10 full-size steam table pans or 10 Crosswise Plus pans and grids

Easily access cooking data with USB port conveniently located at front of unit.

General Information

Henny Penny SmartCombi combi ovens use moist heat and dry heat, either separately or in combination, to produce the ideal cooking conditions for a wide variety of foods.

Four basic cooking modes employ a variety of built-in functions in different ways.

- Steaming/Moist heat:
  86-266°F (30-130°C)
  Low and high-temperature steaming.
- Convection cooking/Dry heat:
  86-572°F (30-300°C) electric
  86-482°F (30-250°C) gas
  Active humidity reduction
- Combination/Dry and moist heat:
  86-482°F (30-250°C).
  Individual or automatic humidity control between 0 and 100% RH.
- Rethermalizing/Dry and moist heat:
  86-356°F (30-180°C)
  Special fan speed function and banqueting programs.

Henny Penny bridges the gap between boiler and boilerless combis with patented Advanced Steam Technology.™ This system generates large amounts of steam in the cooking cabinet quickly without the deliming and maintenance issues of a boiler.

Operator can select humidity levels from 0-100% relative humidity. Digital humidity control continuously measures and maintains the humidity level in the cabinet by automatically adding steam or venting excess humidity.

The SmartCombi features a wide range of pre-programmed menu selections for fully automatic cooking and can be easily programmed by the user. Units include multi-sensor core temperature probe for automatic probe cooking. USB port is standard.

Removable crosswise rails accept full-size steam table pans or Crosswise Plus pans and grids for added capacity.

Standard Features

- Patented Advanced Steam Technology™ for effective steam generation without boilers.
- ClimaSelect climate control allows operator to select any humidity level between 0% and 100%.
- ClimaMonitor automatically measures and maintains selected humidity level.
- Digital control panel features easy-to-read LED displays and icons.
- Manual or automatic cooking:
  - Create and save up to 99 9-step custom cooking programs.
  - Select food category from SmartMenu™ pictogram, then choose preset cooking program.
  - Select and/or change individual parameters during cooking.
- Simple CombiDial control: rotate to select, push to confirm and start.
- Temperature displayed in °F or °C.
- Multi-sensor core temperature probe for automatic probe cooking.
- Choose language for operations and service diagnostics programs.
- Auto-reverse fan for fast, even cooking throughout the cabinet.
- Variable fan speed function for high quality baking, rethermalizing and banquet cooking.
- Delayed start and preheat/cool down button.
- USB port enables simple download of programs, diagnostic messages or HACCP data.
- Filterless grease extraction.
- Retractable spray hose for quick, easy rinsing of interior.
- WaveClean™ self-cleaning system significantly reduces water and detergent consumption.
- Interior cabinet of corrosion resistant chrome-nickel stainless steel.
- Exterior made from 1 mm chrome-nickel stainless steel.
- Full perimeter door seal.
- Energy efficient triple-pane glass.

Options, accessories*

☐ Stands and cabinets
☐ Stacking kit
☐ Chicken grids
☐ Alternate voltages

*See separate accessories data sheets for details

☐ APPROVED	☐ APPROVED AS NOTED	☐ RESUBMIT
AUTHORIZED SIGNATURE		DATE

HENNY PENNY
Engineered to Last™

© 2006 Henny Penny Corporation, Eaton, OH 45320 USA Revised 11/24/10

PROJECT	ITEM NO

*Smart**Combi***™ combi oven

MODEL **ESC-115** electric
GSC-115 gas

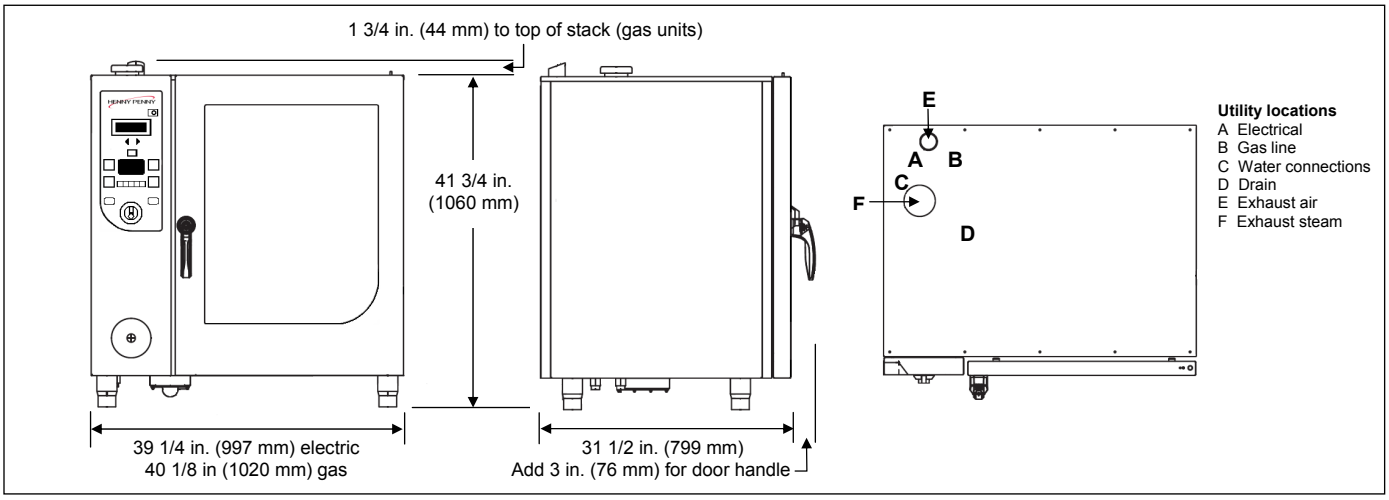

Dimensions

Height: 41 3/4 in. (1060 mm)
Width: 39 1/4 in. (997 mm) electric
40 1/8 in. (1020 mm) gas
Depth: 31 1/2 in. (799 mm)

Required Clearances

Left: 20 in. (500 mm) service access:
Right: 2 in. (50 mm) air flow
Back: 2 in. (50 mm) air flow, utility connections:
Front: 28 in. (700 mm) door open

Crated dimensions

Length: 42 1/2 in. (1080 mm)
Depth: 37 7/8 in. (962 mm)
Height: 50 1/2 in. (1283 mm)
Volume: 47 cu. ft. (1.33 m³)

Net weight: 355 lbs. (160 kg)

Crated weight: 430 lbs. (195 kg)

Heating

Electric Connected load: 16.5 kW
Gas Output: 61500 BTU/hr
Connection: R 3/4 in. NPT external thread

Water connections

3/4 in. standard cold water connection
3/4 in. soft water connection
2 in. (50 mm) drain

Laboratory certifications

Pan capacity

- 10 full-size 2 1/2 in. (65 mm) steam table pans crosswise
- 10 Crosswise Plus pans and grids
- 3 standard 6-chicken grids crosswise, 18 chickens per load
- 6 half-size Crosswise Plus 6-chicken grids, 2 per rail, 36 chickens per load

Electrical

Volts	Phase	Cycle/Hz	Watts	Amps	Wire
208	3	60	15900	42.8-47.6	3+G
240	3	60	15900	37.0-41.8	3+G
400	3	50/60	15900	23.6	3NG
440	3	60	15900	18.5-20.3	3+G
480	3	60	15900	20.2-22.0	3+G
Gas models					
120	1	60	800	N/A	1NG
230	1	50	800	N/A	1NG

Bidding Specifications

- Provide Henny Penny SmartCombi combi oven, model ESC-115 electric or GSC-115 gas. Units are designed to cook with moist heat (gentle or regular steaming), dry heat (convection cooking) or a combination of these cooking modes.
- Unit shall operate with boilerless Advanced Steam Technology.™
- Unit shall have 0-100% humidity control within the cooking chamber.
- Unit shall be programmable using SmartMenu icon-based navigation and LED display that provides optimal viewing of programs, time, temperature and other data.
- Unit shall be equipped with a variable speed, auto reverse fan that moves air in alternating directions for more even heating.
- Unit shall have automated WaveClean self-cleaning system, standard.
- Unit shall have seamless stainless steel cooking chamber, full-perimeter door seal and triple-pane glass for energy efficiency.
- Unit shall have a maximum operating temperature of 572°F (300°C) if electric and 482°F (250°C) if gas.
- Unit shall accommodate up to 10 full-size steam table pans, 2 1/2 in. deep with stainless steel tilt-resistant rails.
- Unit shall have a condensate drip pan with central direct drain.

Continuing product improvement may subject specifications to change without notice.

Henny Penny Corporation
PO Box 60 Eaton OH 45320 USA

+1 937 456.8400 800 417.8417
+1 937 456.8434 Fax 800 417.8434 Fax

www.hennypenny.com

© 2006 Henny Penny Corporation, Eaton, OH 45320 USA Revised 11/24/10